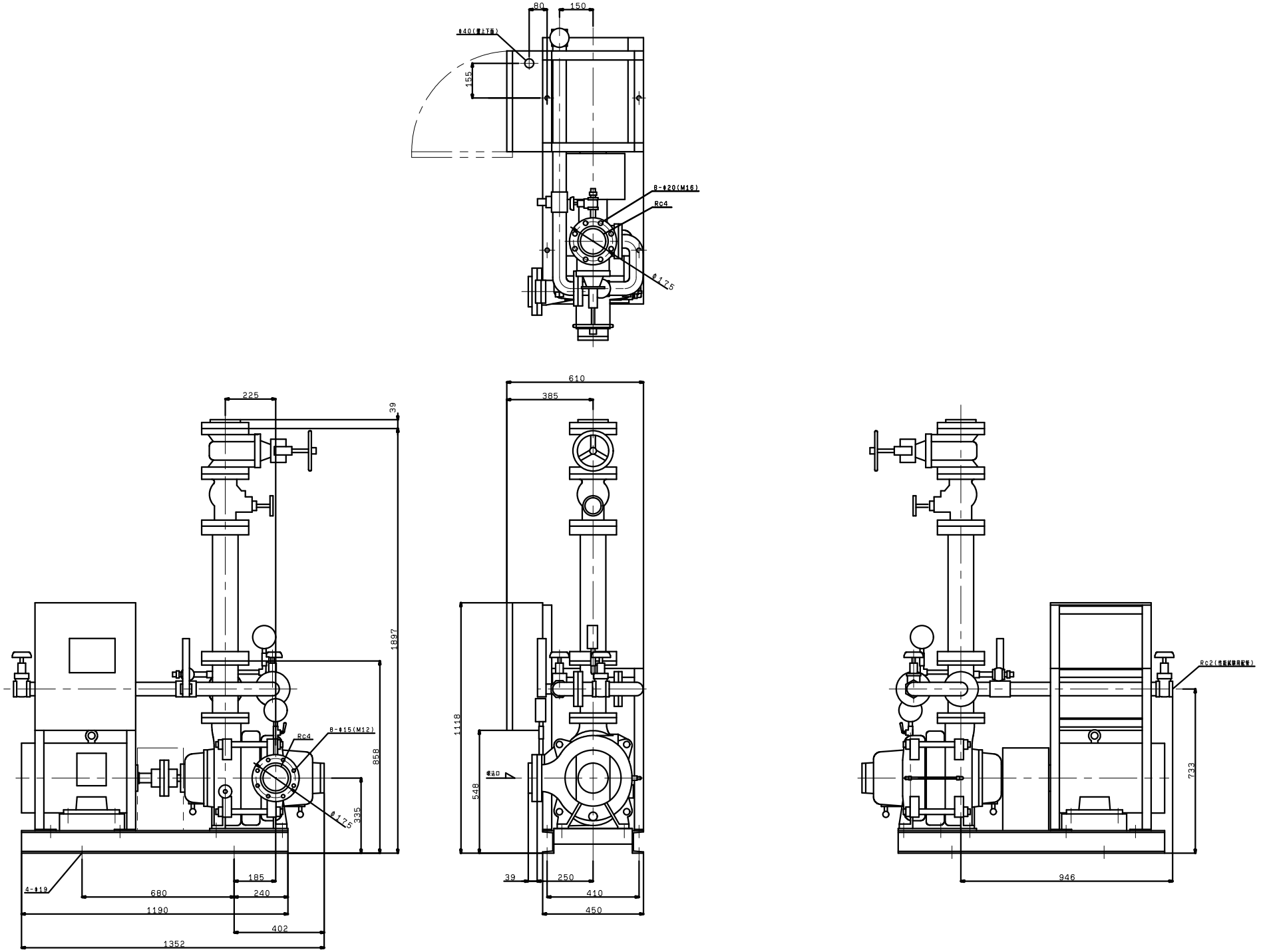KTY1005A2MN11F
VC84