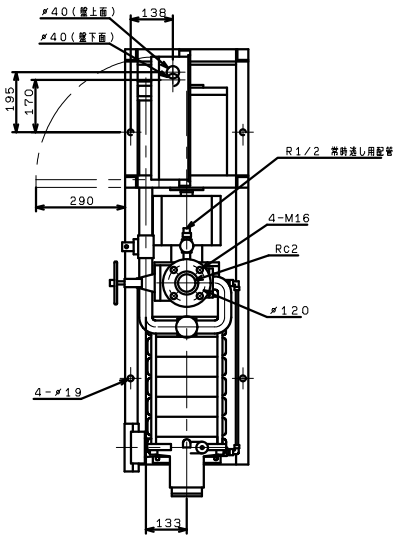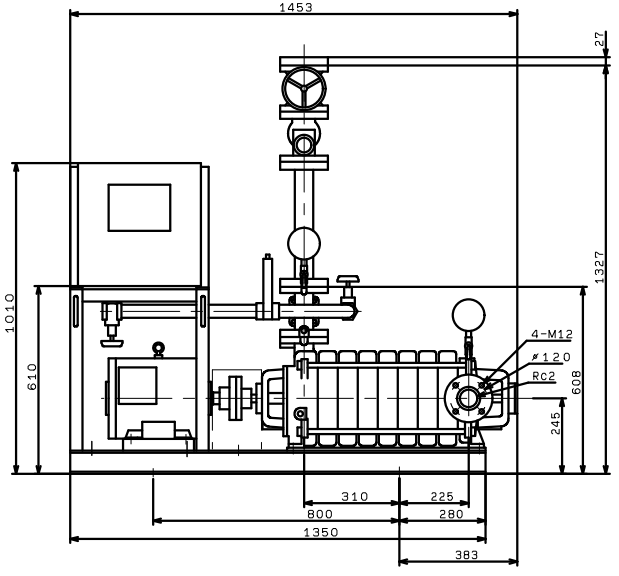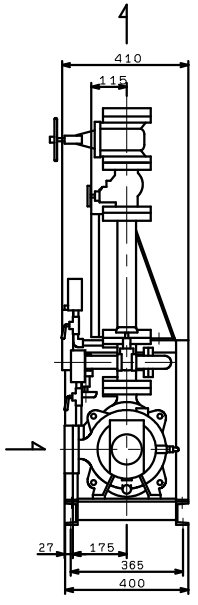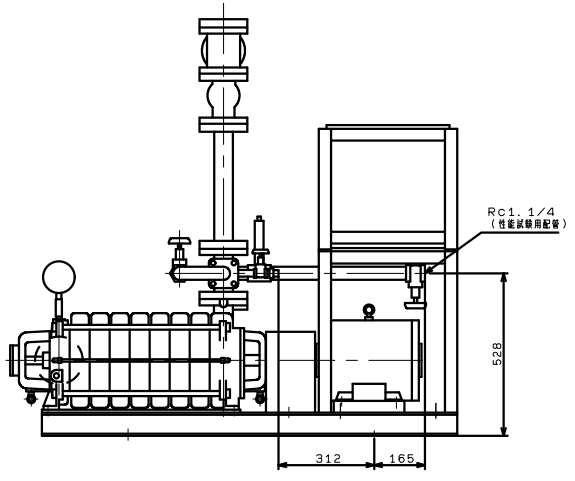KTY505A8ME7.5F
VC82