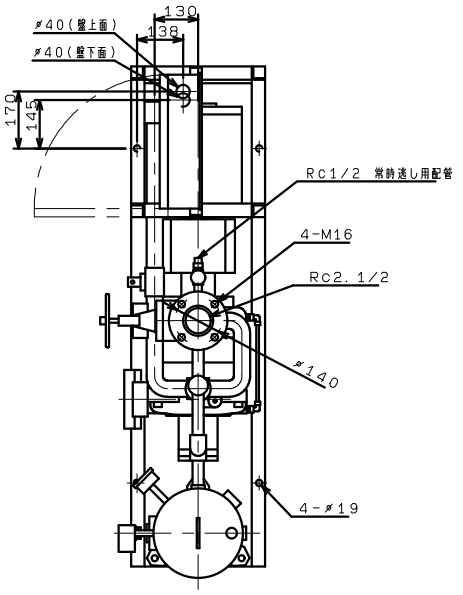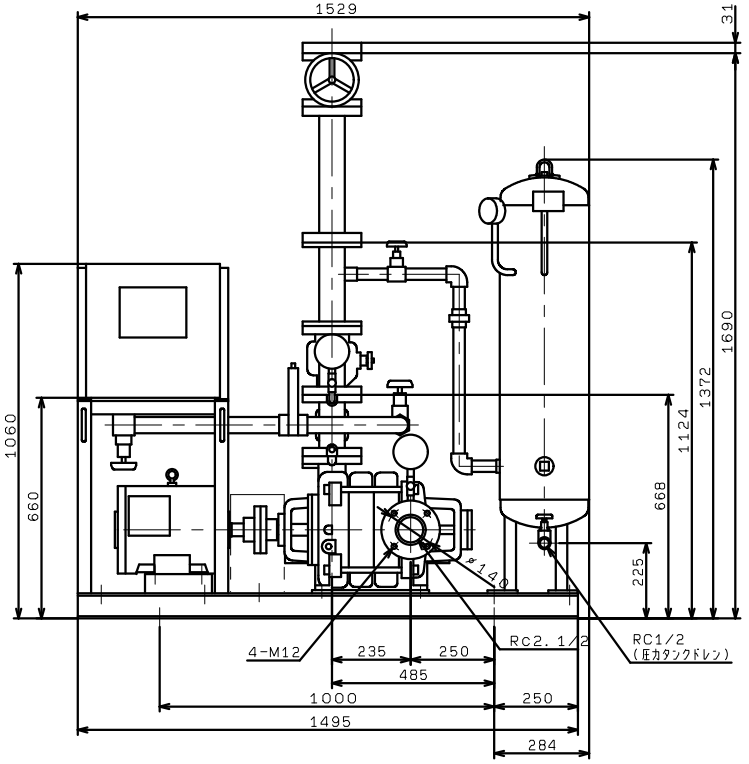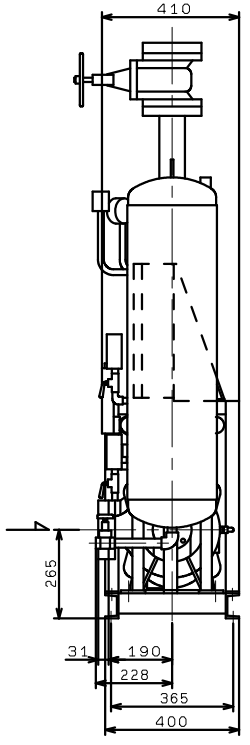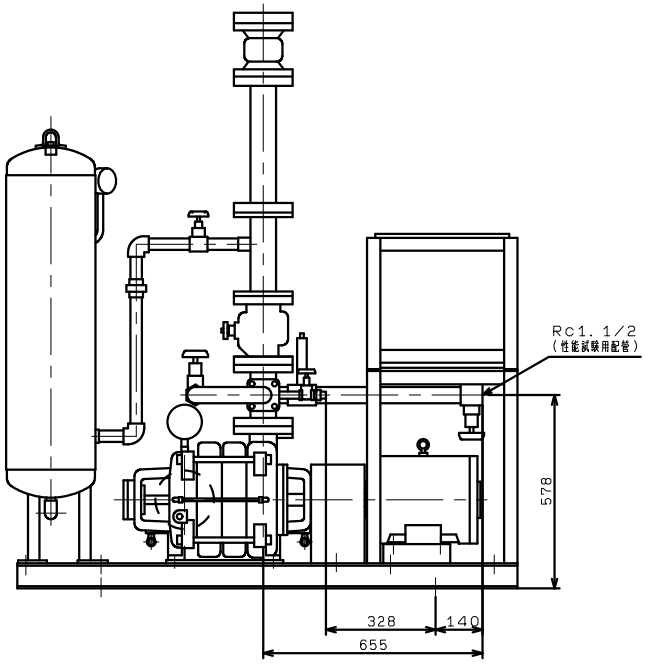KTY656A3ME7.5FP
VC:82